REVISIONS			
REV	CHANGE DESCRIPTION	DATE	NAME
A	INITIAL RELEASE	12MAY2022	AMKOM

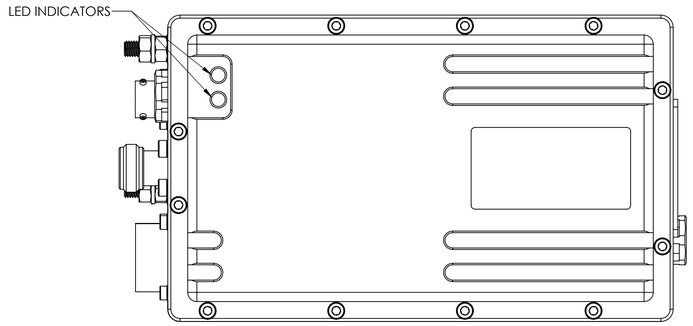

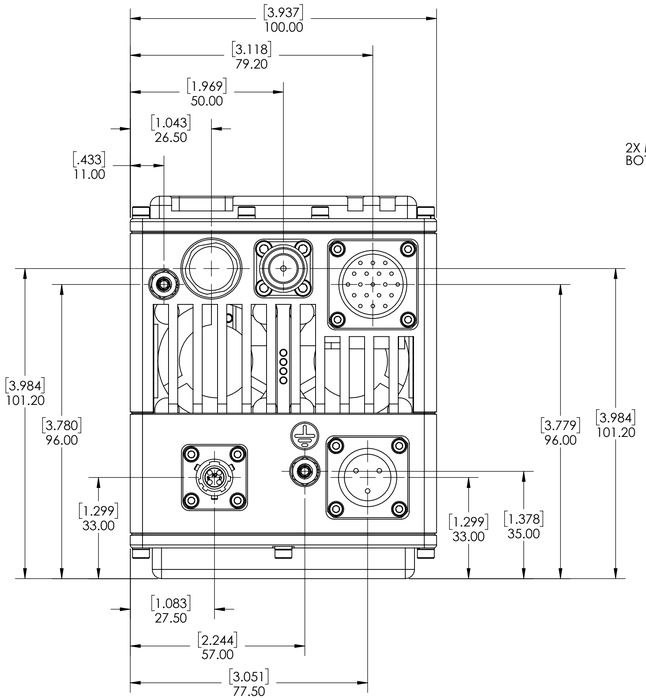

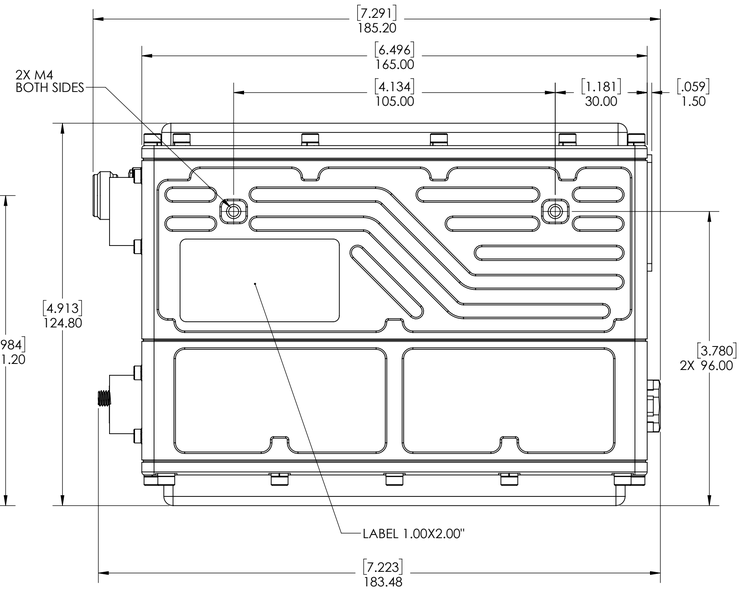

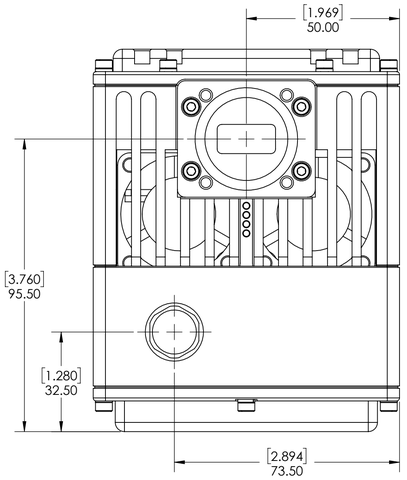

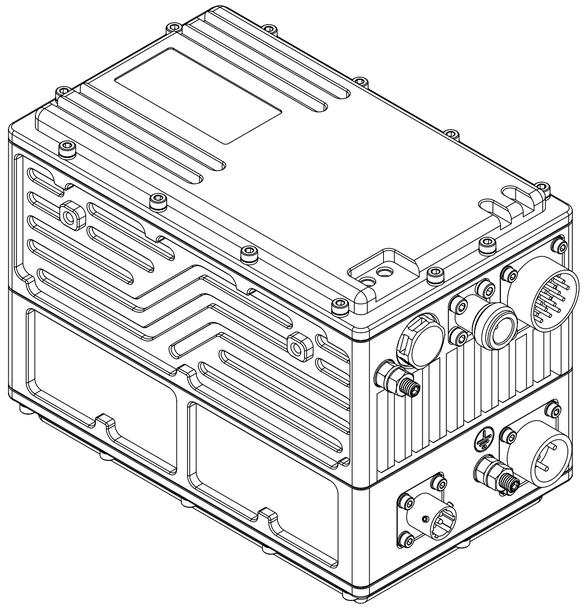

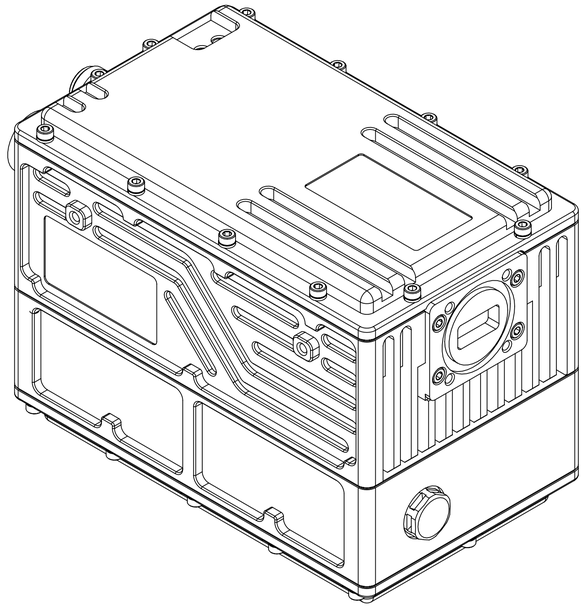

THIS DOCUMENT CONTAINS PROPRIETARY TRADE SECRET AND CONFIDENTIAL INFORMATION WHICH IS THE PROPERTY OF AMKOM DESIGN GROUP INC. THIS DOCUMENT AND THE INFORMATION IT CONTAINS ARE NOT TO BE COPIED, DISTRIBUTED, OR DISCLOSED TO OTHERS, OR USED IN ANY MANNER OUTSIDE OF AMKOM DESIGN GROUP INC WITHOUT PRIOR WRITTEN APPROVAL OF AMKOM DESIGN GROUP INC.

UNLESS OTHERWISE SPECIFIED DIMENSIONS ARE IN MILLIMETERS, TOLERANCES AS SHOWN BELOW

LINEAR		ANGULAR	
X	± 1	X	± 2°
X.X	± 0.25	X.X	± 1°
X.XX	± 0.1		

THIRD ANGLE PROJECTION

INTERPRET DIMENSIONS AND TOLERANCES PER ISO OR ASME Y14.5M-1994

DIMENSIONS SHOWN ARE FINISHED SIZES AND SHALL ALLOW FOR PLATING AND COATING, BUT NOT PAINTING

GENERAL THREAD FIT 6H 6g

Amkom Design Group Inc.

DESCRIPTION

ALKU WITH ACDC

SIZE	PART NUMBER	REV
A1	ALKU NA	A

SHEET 1 OF 1